Summary Specifications

Some Applications

- Raman
- LIBS
- Emission
- Absorbance
- Reflectance
- Fluorescence
- OEM Integrated Systems
- Photoluminescence
- Electroluminescence

System Details

CCD Sensor	Industry Proven e2v CCD 30-11 High Performance Sensor
Pixel Size	26 x 26 µm
Image Area	26.624 x 6.656 mm
Blemishes	Grade 1 According to CCD Manufacturer's Specifications
Standard ADC speed/bits	500 KHz/16 Bits

CCD Performance

Spectrometric Well Capacity	Single Pixel	500 Ke-
	Binned	1000 Ke-
Dark Current	FI @ -50'C	0.015 e/pix/sec
	BI @ -50'C	0.08 e/pix/sec
	OE @ -50'C	0.015 e/pix/sec
Vertical Shift Rate	OE (Full Vert Bin)	65 µsec

(SPECS ABOVE ARE AVERAGE/TYPICAL AND SUBJECT TO CHANGE)

Cooling of 95 degrees below ambient with 10'C liquid chiller and with Zion Deep Cooling option

Optional Cooling (Below Ambient Temp)

Typical Air Cooling	70'C
Typical Liquid Chilled Cooling	95'C**

Other Optional Single ADC Speeds (Factory Set)

100KHz, 16 Bits
1MHz, 16 Bits

System Read Out Noise

Typical @ 500KHz	13.5 e-
*Optional 100KHz	9.0 e-*

Data Interface

USB 2.0
100 Mb Ethernet

100 KHz speed is factory set only

Zion CCD Options

CCD 30-11 1024x256 26x26 µm

Front Illuminated
Standard
Open Electrode
Deep Depletion

Back Illuminated
Standard
UV Coating
Broadband Coating
Deep Depletion
Deep Depletion IR Coating

Coming Soon!
2048X512 12.0X12.0 µm pixel size

www.jirehscientific.com
sales@jireh-technologies.com

Additional Camera Specifications

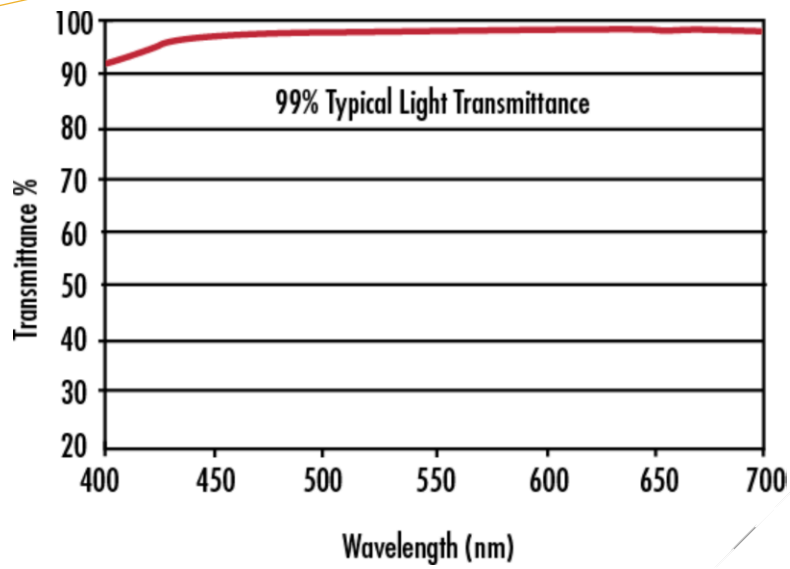

Anti-Reflection (AR) Coated High Efficiency Window with a Broadband

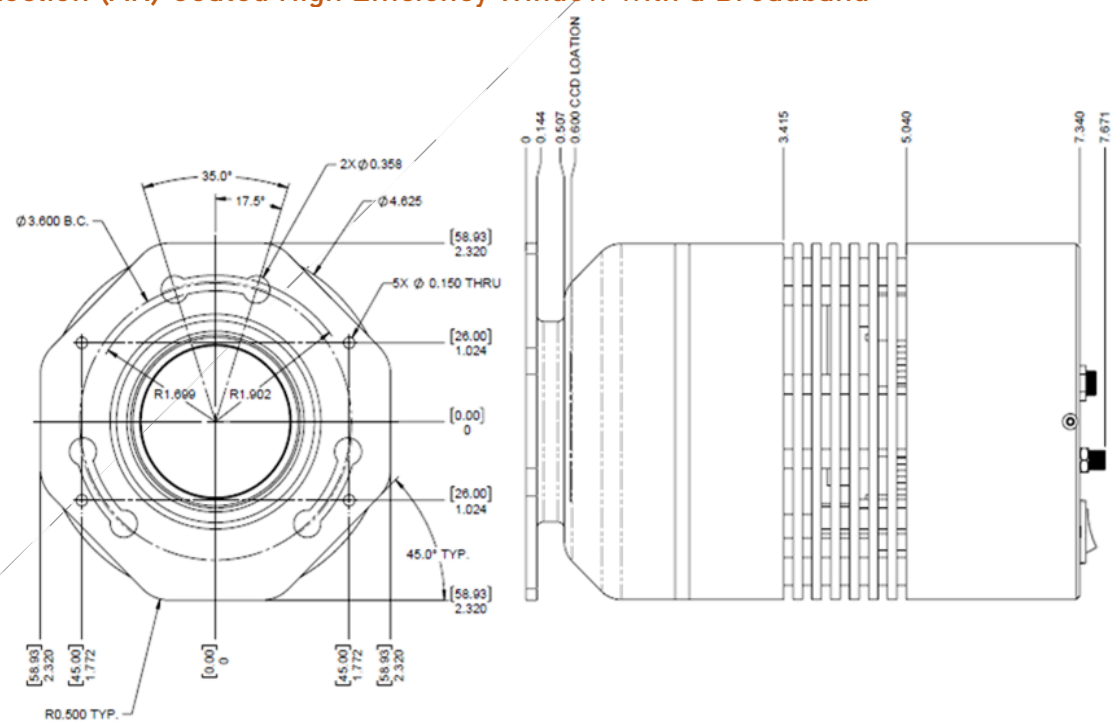

Spectrometer Mount and Camera Detail Drawing

Additional Camera Specifications

Typical Spectral Response for the JSI's Zion 256 BI camera -20'C, No window (Sensor specifications per the manufacturer).

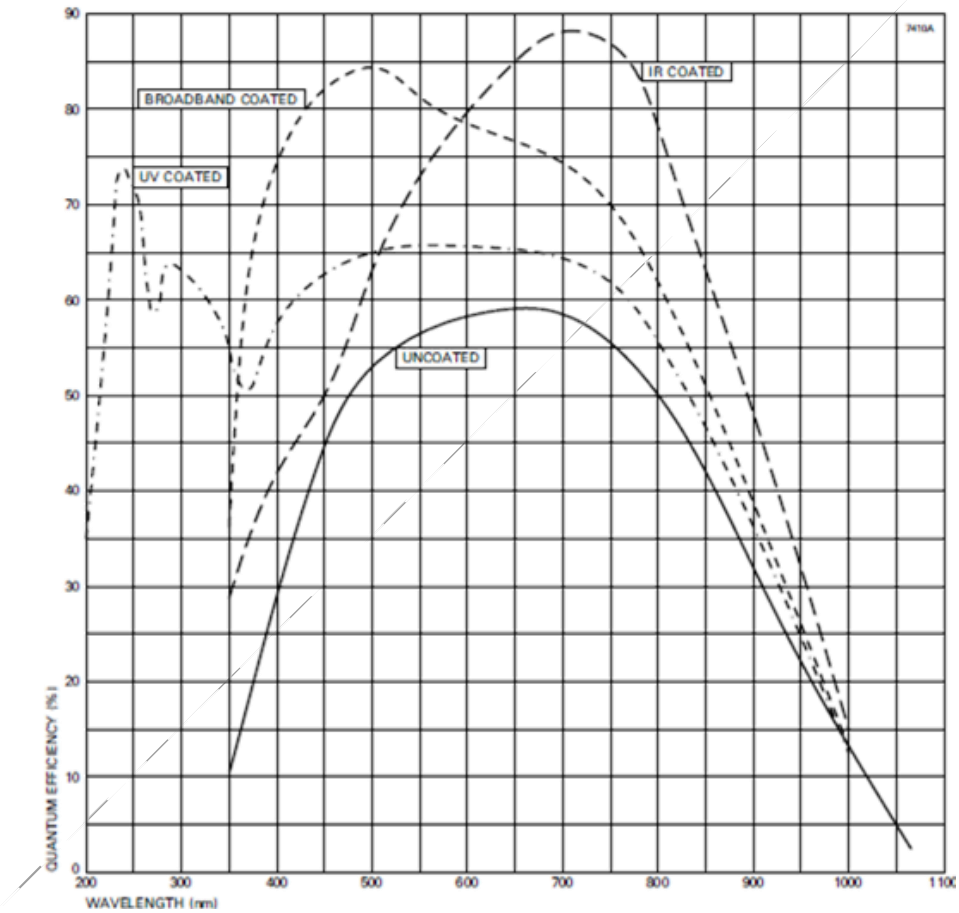

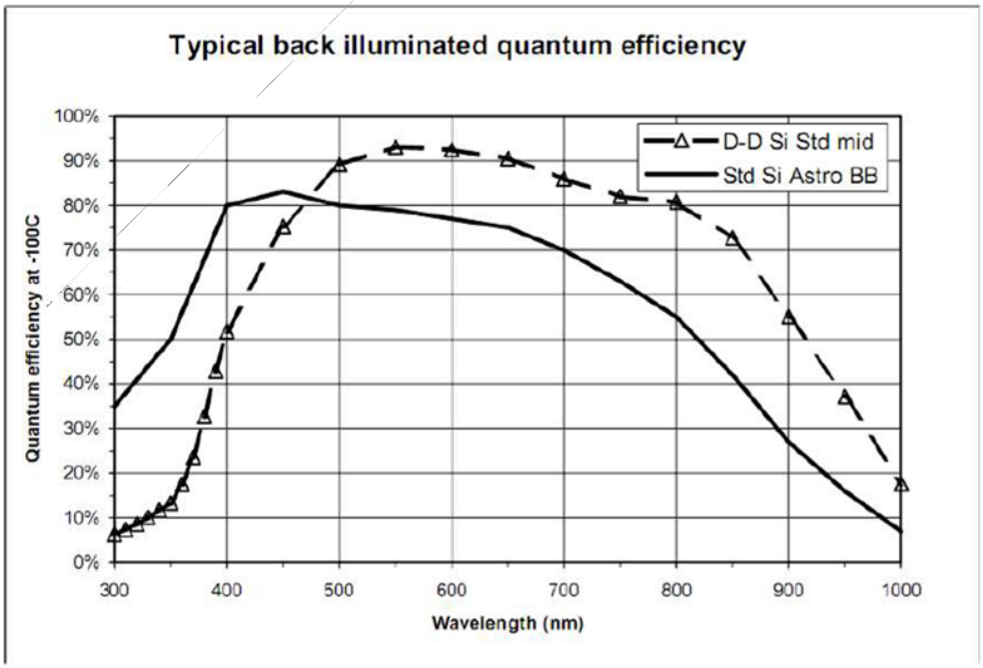

Comparison of the typical spectral response for the JSI's Zion 256 BI and JSI's Zion 256 BI DD (Sensor specifications per the manufacturer).